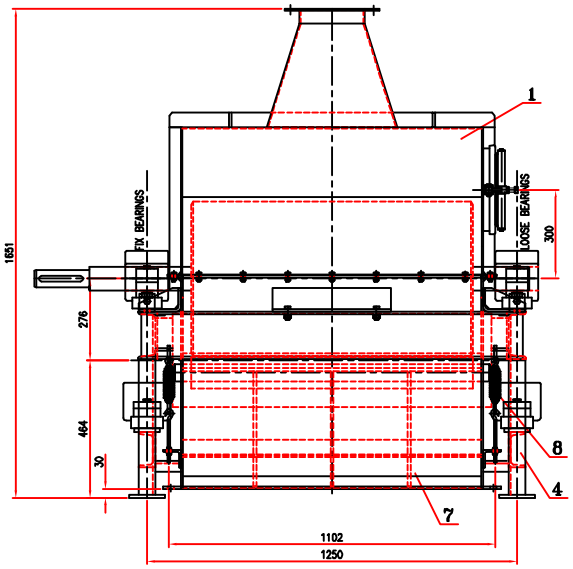

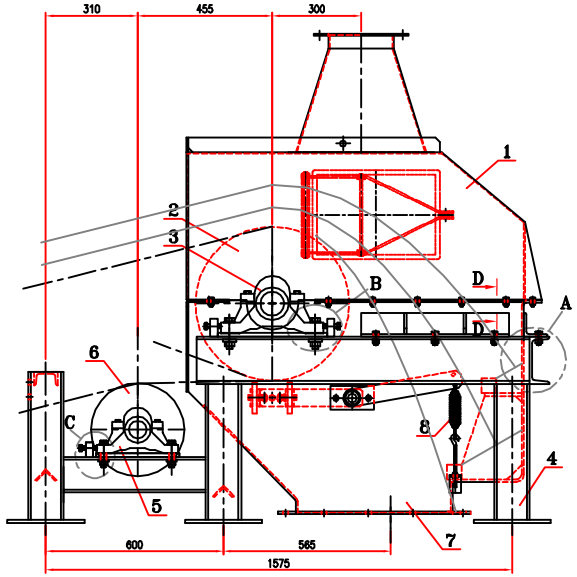

NOTES:

1- ALL DIMENSIONS ARE IN mm UNLESS OTHERWISE SPECIFIED.

2- ALL TOLERANCES ARE ACCORDING TO DIN 7168-M UNLESS OTHERWISE SPECIFIED.

3- FAG PLUMMER BEARING HOUSING SNV160 , BEARING 22218ESK.TVPB , TWO-LIP SEAL DH518 , LOCATING RING FRM160/12.5(ONLY FOR DRIVE SIDE(FIX BEARING)) , ADAPTER SLEEVE H318 ,END COVER DKV160, WITH GREASE NIPPLE (NIP.DIN71412-M10x1).

4- FAG PLUMMER BEARING HOUSING SNV120 , BEARING 22213ESK.TVPB , TWO-LIP SEAL DH513 , LOCATING RING FRM120/10 (ONLY FOR ONE SIDE(FIX BEARING)) , ADAPTER SLEEVE H313 ,END COVER DKV120, WITH GREASE NIPPLE (NIP.DIN71412-M10x1).

ITEM	QTY.	DESCRIPTION	REF. TO DWG. NO.	WEIGHT(Kg)	TOTAL WEIGHTING (Kg)	MATERIAL	REMARK
20	4	NUT M20			8	DIN934	
19	8	SPRING WASHER A20			FSt	DIN127	
18	8	SPRING WASHER A16			FSt	DIN127	
17	4	NUT M16			8	DIN934	
16	4	BOLT M16x80			8.8	DIN931	
15	19	SPRING WASHER A10			FSt	DIN127	
14	19	BOLT M10x25			8.8	DIN933	
13	4	BOLT M20x100			8.8	DIN931	
12	19	NUT M10			8	DIN934	
11	8	TAPER WASHER M14			St	DIN434	
10	8	NUT M14			8	DIN934	
9	8	BOLT M14x35			8.8	DIN933	
8	1	EXTERNAL SCRAPER	A-AS-U-M-BC11A-150-01				
7	1	HEAD LOWER CHUTE	A-AS-U-M-BC11A-149-01				
6	1	HEAD SNUB PULLEY (800W-ø315)	A-AS-U-M-BC11A-148-01				
5	2	BEARING HOUSING SNV120-G944AA					SEE NOTE 4
4	1	HEAD SUPPORT	A-AS-U-M-BC11A-147-01				
3	2	BEARING HOUSING SNV160					SEE NOTE 3
2	1	HEAD PULLEY	A-AS-U-M-BC11A-146-01				
1	1	CHUTE COVER	A-AS-U-M-BC11A-145-01				

PART LIST

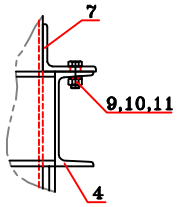

Detail "A"
Scale 1:5

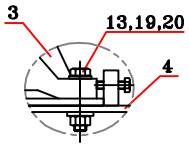

Detail "B"
Scale 1:5

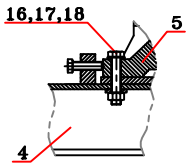

Detail "C"
Scale 1:5

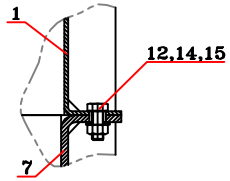

Section D-D
Scale 1:2.5

REV.	DESCRIPTION	DESIGN	CHECK	APPR.	DATE

	DESIGN			DESIGN STAGE	
SIGNATURE	MM.Maharlouie			FOR APPROVAL	
DATE					
FILE NAME	DRAWING No.		SCALE	UNITS	SH. No.
HEAD ASSEMBLY	A-AS-U-M-BC11A-144 REV 01		AS SHOWN	MILLIMETER	A2